REV.	DATE	DESCRIPTION

PRODUCT DRAWING

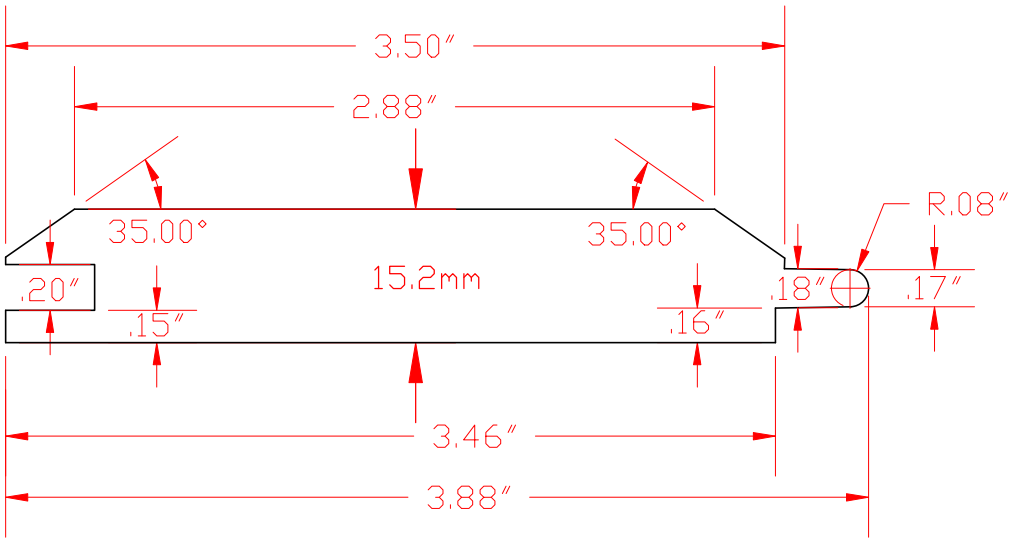

3.5 V—GROOVE

THIS DOCUMENT CONTAINS PROPRIETARY INFORMATION WHICH SHALL NOT BE REPRODUCED, TRANSFERRED TO OTHER DOCUMENTS, DISCLOSED TO OTHERS, USED FOR MANUFACTURING OR ANY OTHER PURPOSE WITHOUT PRIOR WRITTEN PERMISSION BY JAIN AMERICA HOLDINGS

APPROVALS		DATE
DRAWN	MK	11/03/2025
ISSUED	BW	
REVISED		

JAIN BUILDING PRODUCTS

3.5 V GROOVE

SIZE	MACHINE ID.	DRAWING NO.	REV.
3.5″			

SCALE: FILE: SHEET OF